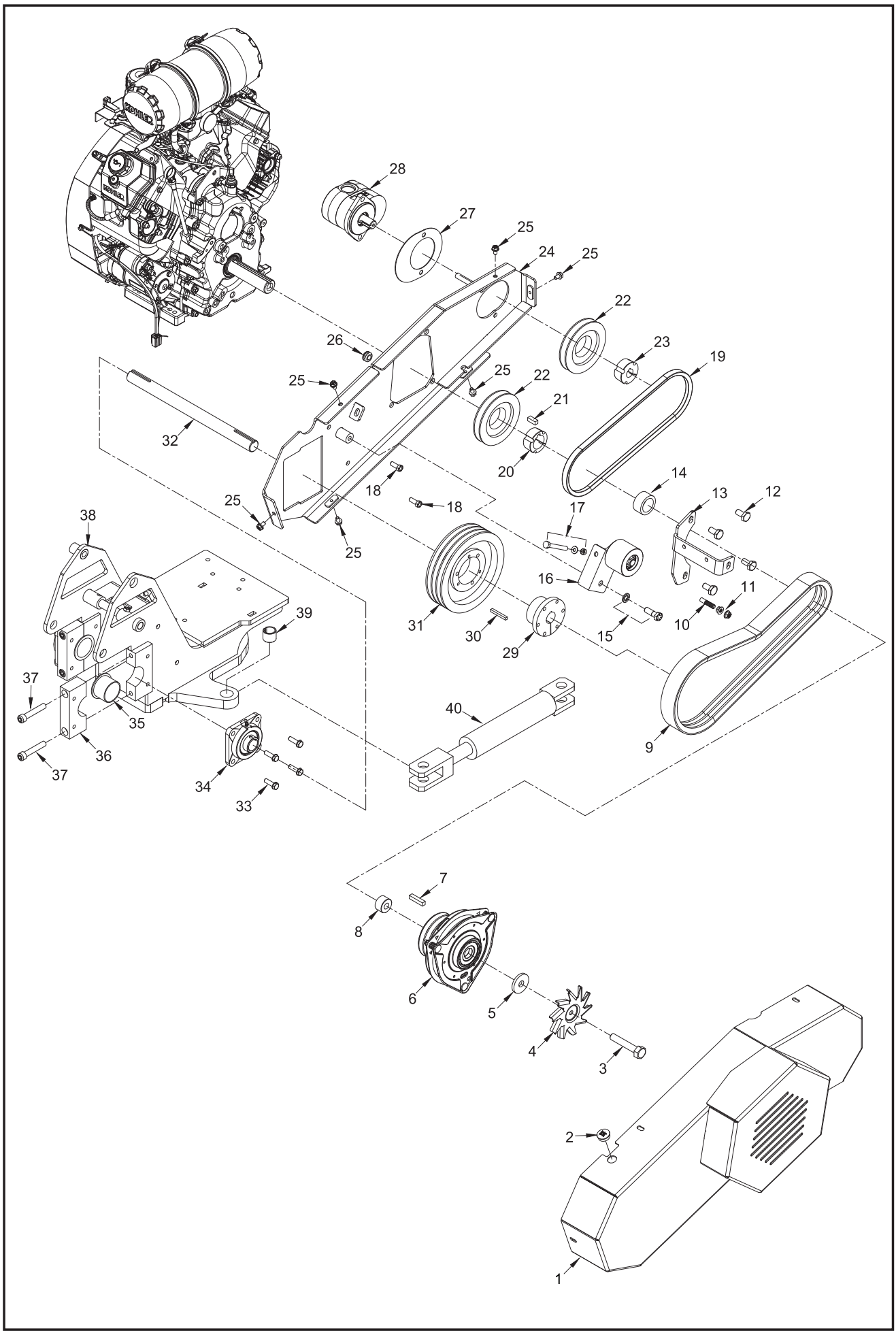

NOTICE Parts may not be exactly as shown.

LOCATION	PART NUMBER	DESCRIPTION
1.	208-2000-16	Beltshield Assembly
2.	904-0009-82	Grease Zerk Access Cover
3.	900-4917-99	Clutch Fan Bolt - 5/8”-18NC x 3 1/2” Hex Head Bolt
4.	900-6970-04	Clutch Fan
5.	208-3000-89	Clutch Fan Spacer
6.	900-6912-24	Clutch
7.	001-3007-04	Key for Clutch
8.	208-3000-71	Clutch Spacer (Inside Clutch)
9.	900-1924-55	Engine to Jack Shaft Drive Belt
10.	208-3001-09	Clutch Retainer Bolt - 3/8”-16NC x 1 3/4”
11.	900-4906-12	Clutch Retainer Nut - 3/8”-16NC Serrated Flange Nut
12.	900-4906-66	Beltshield Engine Bolt - 7/16”-14NC x 1” Hex Head
13.	208-3000-65	Clutch Retainer
14.	208-3001-10	Clutch Spacer (Between Clutch and Engine Sheave)
15. a.	900-4906-72	Belt Tensioner Pivot Bolt - 1/2”-13NC x 1 1/2” Hex Head Bolt
b.	900-4906-86	1/2” Lock Washer
16.	208-1000-15	Clutch Belt Tensioner Assembly
17. a.	900-4923-66	Tension Adjuster Bolt - 3/8’-16NC x 3” Hex Head Bolt
b.	900-4906-60	3/8”-16NC Lock Nut
c.	900-4910-46	3/8” Mill Carb Washer
18.	900-4906-50	Beltshield Mount Bolt - 3/8”-16NC x 1”
19.	900-1924-79	Engine to Hydraulic Pump Drive Belt
20.	900-1924-50	Engine Sheave to Pump Sheave Bushing
21.	001-3007-05	Key for Engine to Pump Bushing
22.	900-1924-78	Engine & Pump Sheave
23.	900-1924-62	Pump Sheave to Engine Sheave Bushing
24.	208-2000-15	Beltshield Mount
25.	900-4924-54	Beltshield Bolt - 5/16”-18NC x 1/2” Serrated Flange Bolt
26.	900-7900-10	Rubber Grommet
27.	208-3000-75	Hydraulic Pump Mount
28.	900-3982-38	Hydraulic Pump
29.	900-1924-31	Jack Shaft Sheave Bushing
30.	200-300087	Key for Jack Shaft Sheave Bushing
31.	900-1924-54	Jack Shaft Sheave
32.	208-3000-43	Jack Shaft
33.	900-4913-92	Jack Shaft Bearing Bolt - 3/8”-16NC x 1 1/4” Serrated Flange Bolt
34.	900-1923-25	Jack Shaft Bearing
35.	900-1923-27	Pivot Flange Bushing - 2 3/16” OD x 2” ID x 1 1/2”
36.	208-3000-90	Pivot Bearing Cap
37.	900-4916-70	Pivot Bearing Cap Bolt - 1/2”-13NC x 2 3/4”
38.	208-1000-07	Pivot Assembly (Includes 32 - 39)
39.	900-1902-42	Bushing - 1” ID x 1 1/4” OD x 1”
40.	900-3958-08	Hydraulic Swing Cylinder

NOTICE **Nuts, bolts, washers, and all other components can be ordered by physical description.**

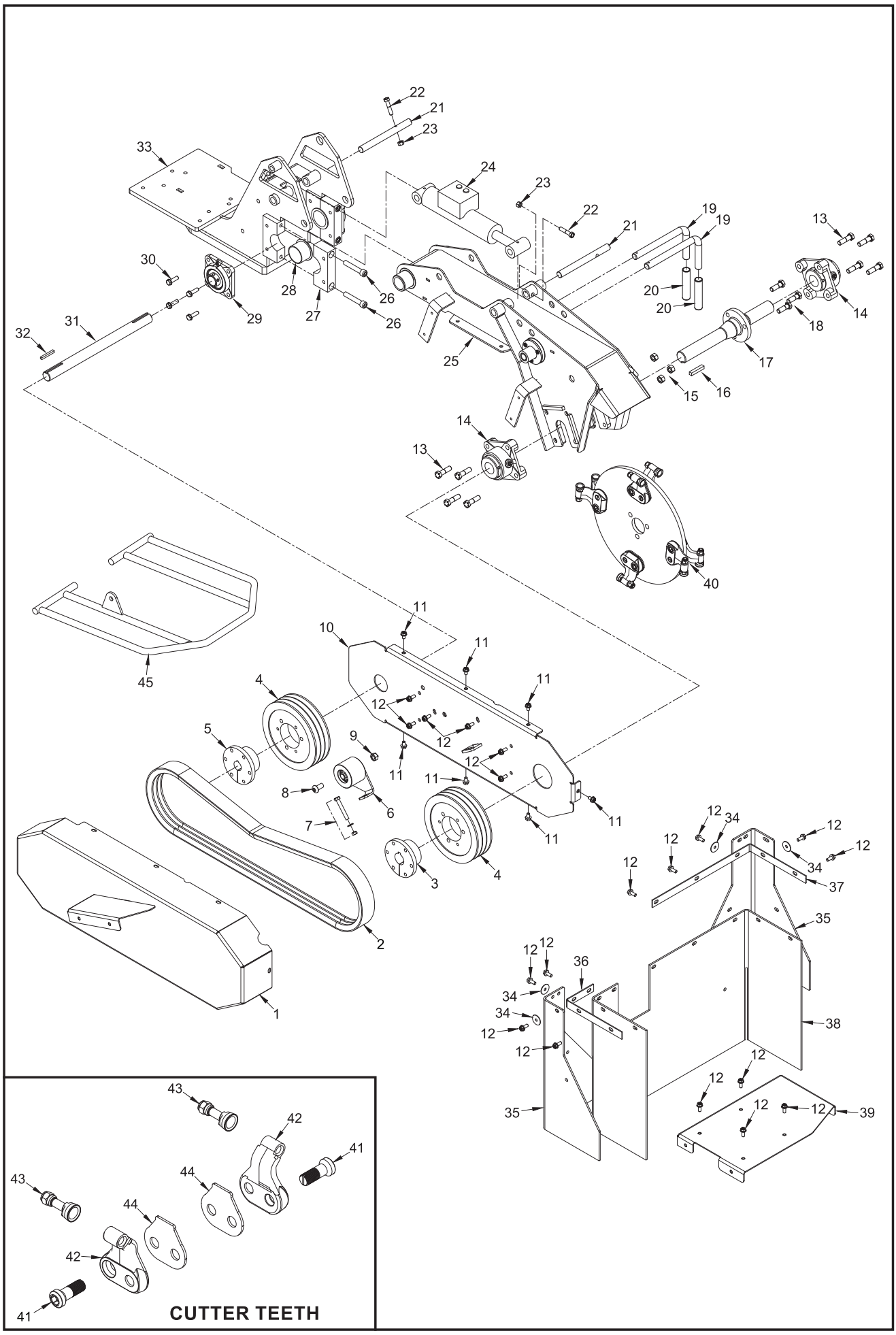

NOTICE Parts may not be exactly as shown.

LOCATION	PART NUMBER	DESCRIPTION
1.	207-2000-44	Beltshield
2.	900-1906-70	Cutter Wheel Belt
3.	900-1909-19	Cutter Wheel Sheave Bushing
4.	900-1924-42	Cutter Wheel & Jack Shaft Sheave
5.	900-1924-43	Jack Shaft Sheave Bushing
6.	207-1000-21	Cutter Wheel Belt Tensioner
7. a.	900-4924-91	Belt Tensioner Adjuster Bolt - 3/8”-16NC x 2 1/2”
b.	900-4906-60	3/8”-16NC Lock Nut
c.	900-4910-46	3/8” Mill Carb Washer
8.	900-4924-90	Belt Tensioner Mount Bolt - 1/2”-13NC x 1” Button Head Cap Screw
9.	900-4906-84	Belt Tensioner Mount Nut - 1/2”-13NC Hex Head Nut
10.	207-2000-57	Beltshield Mount
11.	900-4924-54	Beltshield Bolt
12.	900-4910-90	5/16”-18NC x 3/4” Serrated Flange Bolt
13.	900-4906-73	Cutter Wheel Bearing Bolt - 1/2”-13NC x 1 3/4” Hex Head Bolt
14.	900-1924-11	Cutter Wheel Bearing
15.	900-4913-93	Cutter Wheel Shaft Nut - 1/2”-13NC Lock Nut
16.	001-3007-08	Key for Cutter Wheel Shaft
17.	208-3000-35	Cutter Wheel Shaft
18.	900-4906-72	Cutter Wheel Shaft Bolt - 1/2”-13NC x 1 1/2” Hex Head Bolt
19.	955-300086	Cutter Wheel Lock Pin
20.	900-7900-96	Cutter Wheel Lock Pin Rubber Handle
21.	208-3000-26	Lift Cylinder Pin
22.	900-4903-31	Lift Cylinder Pin Bolt - 3/8”-16NC x 1 3/4” Hex Head Bolt
23.	900-4906-56	Lift Cylinder Pin Nut - 3/8”-16NC Nut
24.	900-3941-35	Lift Cylinder
25.	208-2000-06	Cutter Wheel Arm
26.	900-4916-70	Pivot Bearing Cap Bolt - 1/2”-13NC x 2 3/4”
27.	208-3000-90	Pivot Bearing Cap
28.	900-1923-27	Pivot Flange Bushing - 2 3/16” OD x 2” ID x 1 1/2”
29.	900-1923-25	Jack Shaft Bearing
30.	900-4913-92	Jack Shaft Bearing Bolt - 3/8”-16NC x 1 1/4” Serrated Flange Bolt
31.	208-3000-43	Jack Shaft
32.	200-300087	Key for Jack Shaft Sheave Bushing
33.	208-1000-07	Pivot Assembly (Includes 21 - 23 & 25 - 30)
34.	900-4913-46	Fender Washer - 5/16” x 1 1/4”
35.	208-3001-12	Chip Curtain - Small
36.	208-3000-33	Chip Pan Strap - Right Side
37.	208-3000-30	Chip Pan Strap - Left Side
38.	208-3000-29	Chip Curtain - Large
39.	208-2000-11	Bolt On Chip Pan
40.	208-1000-05	Cutter Wheel Assembly (Includes 14, 16, 17 & 40 - 43)
41. a.	900-9907-42	Pocket Bolt
b.	900-9916-03	Pocket Bolt w/ Spacer
42.	900-9907-86	Angle Pocket
43. a.	900-9926-71	Wear Sharp Tooth
b.	900-9937-58	Wear Sharp Tooth Nut
44.	900-9938-57	Spacer (4 Required - Every Other Pocket)
45.	See Page 56	Nose Bar Assembly

NOTICE **Nuts, bolts, washers, and all other components can be ordered by physical description.**

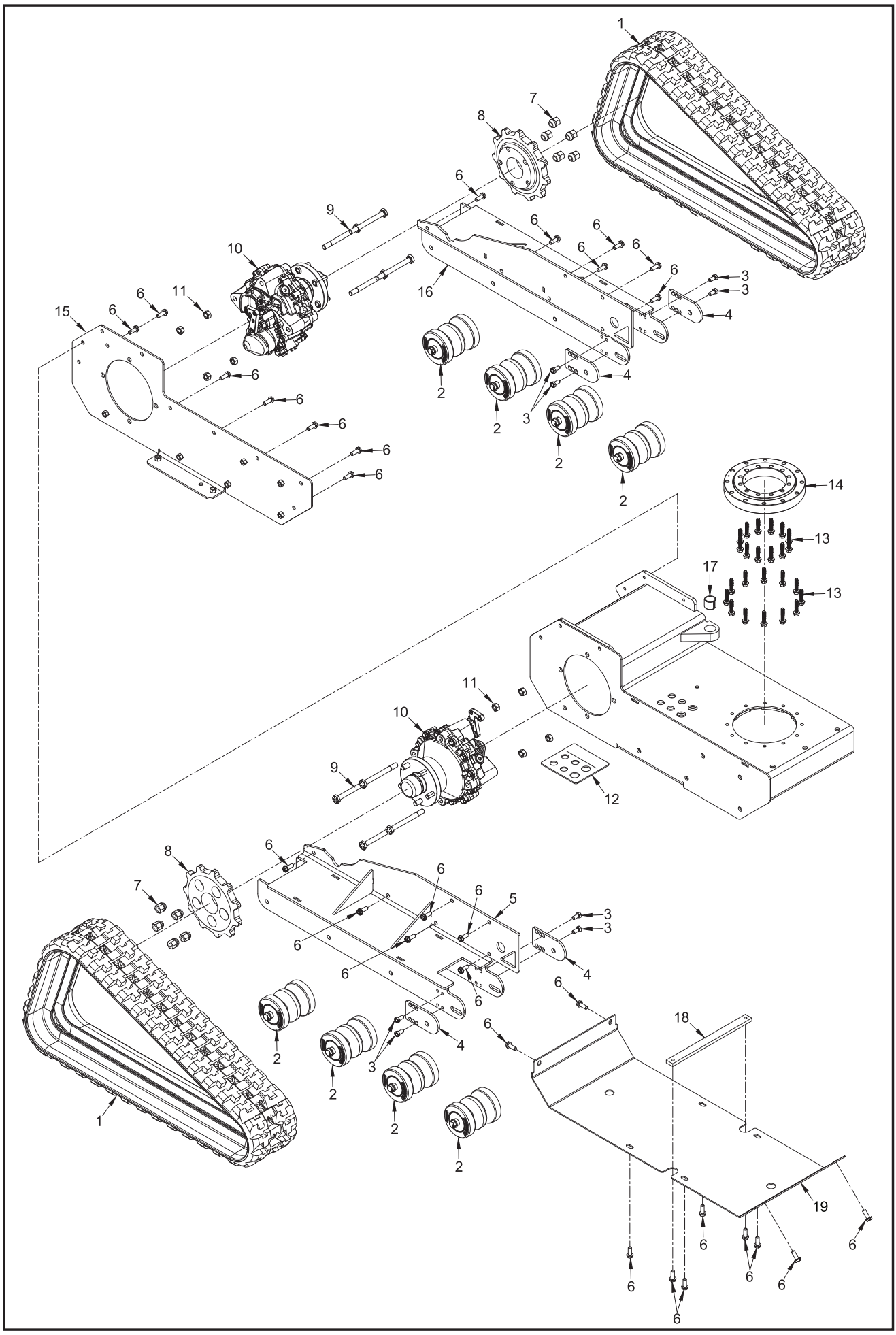

NOTICE Parts may not be exactly as shown.

LOCATION	PART NUMBER	DESCRIPTION
1.	900-5914-89	Tracks
2.	900-5914-27	Track Rollers
3.	900-4906-54	Track Roller Adjuster Bolt - 3/8”-16NC x 3/4” Hex Head Bolt
4.	208-3000-12	Track Roller Adjuster
5.	208-2000-25	Track Carriage - Right Side
6.	900-4913-91	3/8”-16NC x 1” Serrated Flange Bolt
7.	900-4924-16	1/2” Lug Nut
8.	208-3001-05	Track Drive Sprocket
9.	900-4906-81	Track Drive Motor Bolt - 1/2”-13NC x 5” Hex Head Bolt
10.	900-3978-18	Track Drive Motor
11.	900-4906-84	Track Drive Motor Nut - 1/2”-13NC Lock Nut
12.	208-3001-13	Bulkhead Plate
13.	900-4924-97	Slew Ring Bearing Bolt - M8 x 1.25 x 40MM Serrated Flange Bolt
14.	900-1923-23	Slew Ring Bearing
15.	208-2000-01	Bolt On Right Side Plate
16.	208-2000-04	Track Carriage - Left Side
17.	900-1902-42	Bushing - 1” ID x 1 1/4” OD x 1”
18.	208-3001-19	Base Brace
19.	208-3000-08	Bolt On Skid Plate

NOTICE **Nuts, bolts, washers, and all other components can be ordered by physical description.**

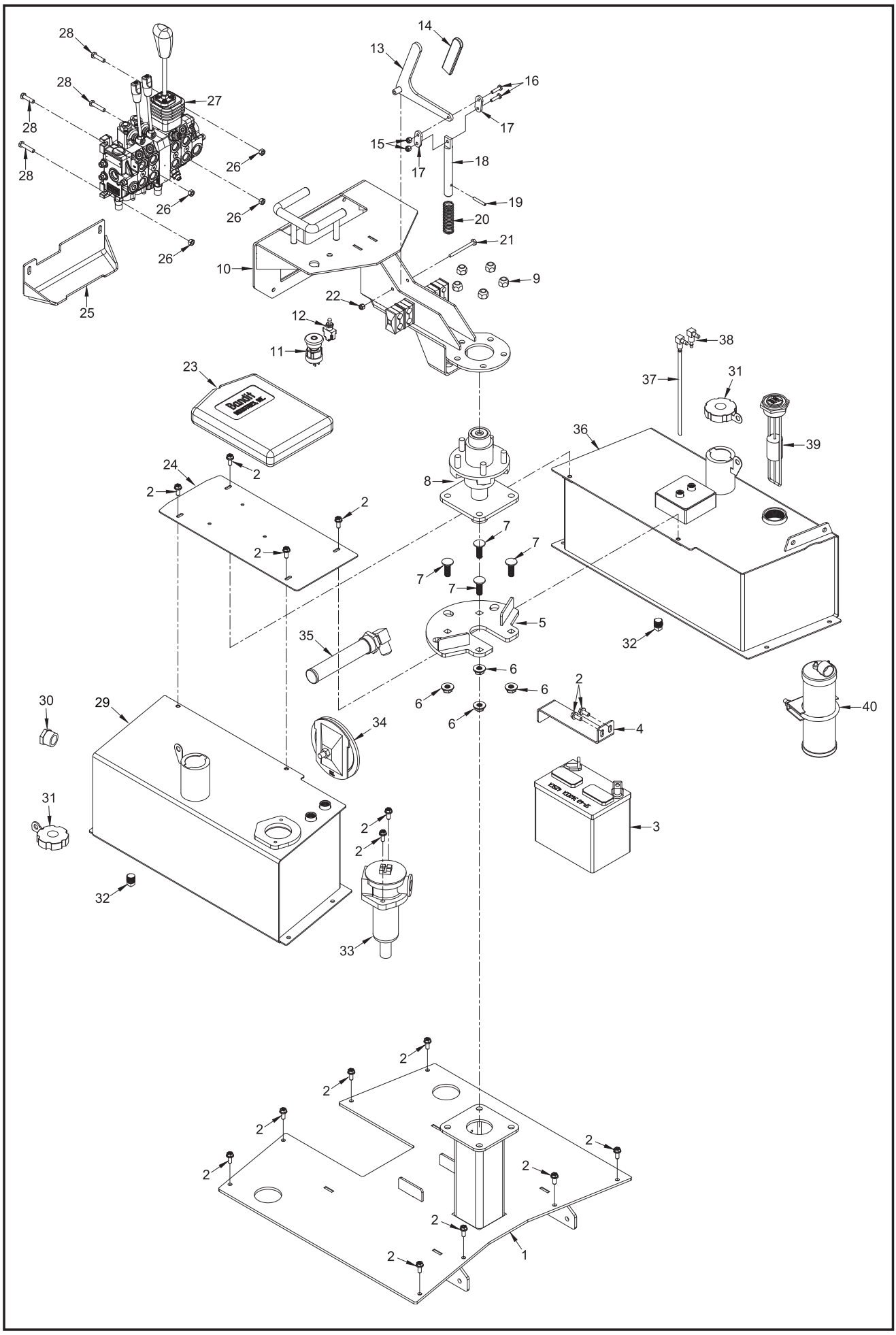

NOTICE Parts may not be exactly as shown.

LOCATION	PART NUMBER	DESCRIPTION
1.	208-2000-04	Tank Deck Assembly (Includes 4)
2.	900-4910-90	5/16”-18NC x 3/4” Serrated Flange Bolt
3.	900-6911-34	SP40 Battery
4.	208-3000-66	Battery Strap
5.	208-2000-13	Swing Out Arm Lock Assembly (Includes 6 - 7)
6.	900-4913-58	1/2”-13NC Serrated Flange Nut
7.	900-4913-28	1/2”-13NC x 1 1/2” Carriage Bolt
8. a.	900-5912-79	Swing Out Arm Spindle
b.	900-5915-82	Grease Cap for Hub
c.	900-5911-99	Inner and Outer Bearing for Hub
d.	900-5912-00	Inner and Outer Bearing Cup for Hub
e.	010-060-00	Inner and Outer Seal for Hub
9.	900-4909-42	1/2”-20NF Lug Nut
10. a.	208-1000-11	Swing Out Arm Assembly (Includes 9, 11 - 22 & 25 - 28)
b.	208-2000-12	Swing Out Arm
11.	900-2931-47	E-Stop
12.	900-2910-93	Cutter Wheel On/Off Switch
13.	208-2000-14	Swing Out Lock Assembly
14.	900-9906-75	Rubber Grip for Lock Handle
15.	900-4909-68	Swing Out Arm Linkage Nut - 1/4”-20NC Hex Head Nut
16.	900-4909-72	Swing Out Arm Linkage Bolt - 1/4”-20NC x 1” Hex Head Bolt
17.	996-3007-25	Swing Out Arm Linkage
18.	208-3000-60	Swing Out Arm Locking Pin
19.	900-4923-40	Swing Out Arm Spring Pin
20.	900-4923-61	Swing Out Arm Locking Pin Spring
21.	900-4909-80	Swing Out Lock Bolt - 1/4”-20NC x 3” Hex Head Bolt
22.	900-4909-68	Swing Out Lock Nut - 1/4”-20NC Hex Head Nut
23.	900-9910-28	Manual Holder
24.	208-3000-68	Tank Spacer Cover
25.	208-3001-00	Swing Out Support
26.	900-4910-74	5/16”-18NC Hex Head Bolt
27.	900-3981-98	Hydraulic Control Valve
28.	900-4906-39	Valve Bolt - 5/16”-18NC x 1 1/2” Hex Head Bolt
29. a.	208-1000-09	Hydraulic Tank Assembly (Includes 30 - 35)
b.	208-2000-10	Hydraulic Tank
30.	900-3900-44	Sight Gauge
31. a.	900-3988-07	Tank Cap (Start 1/18)
b.	900-3941-30	Hydraulic Tank Cap - Black (Pre 1/18)
c.	900-3966-01	Gasoline Tank Cap - Red (Pre 1/18)
32.	900-3921-01	Magnetic Drain Plug
33. a.	900-3951-31	Hydraulic Filter
b.	900-3951-32	Filter Only
34.	900-3980-29	Hydraulic Clean Out Door
35.	900-3944-78	Suction Screen
36. a.	208-1000-08	Fuel Tank Assembly (Includes 31 - 32 & 37 - 40)
b.	208-2000-09	Fuel Tank
37. a.	900-3909-04	1/4” NPT 90° Fuel Line
b.	900-3909-03	Drop Pipe
38.	900-3909-04	1/4” NPT 90° Fuel Line
39.	900-2929-09	8” Sight Gauge
40. a.	900-3967-53	Carbon Cannister
b.	900-6910-94	Cannister Clamp

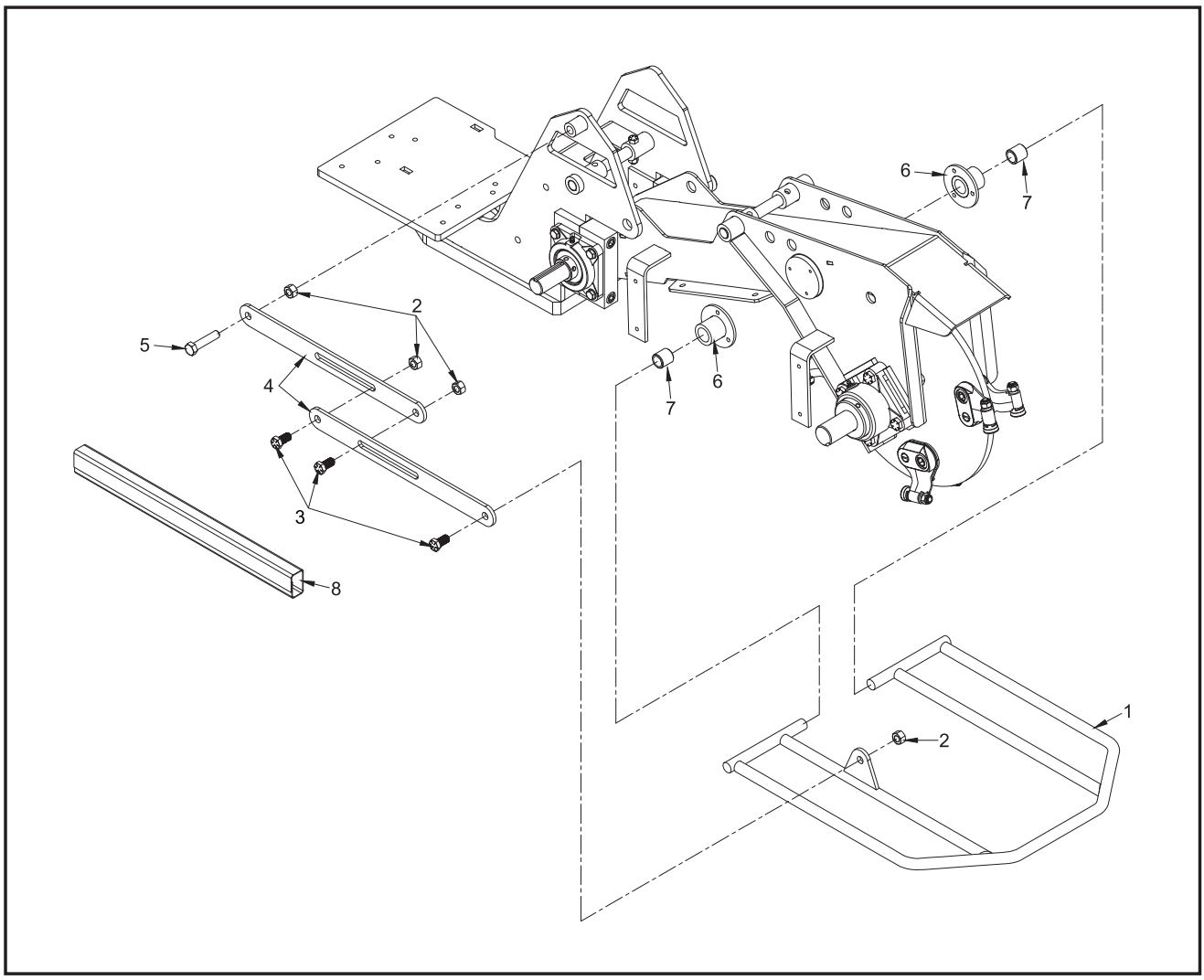

LOCATION	PART NUMBER	DESCRIPTION
1.	208-2000-20	Nose Bar Assembly
2.	900-4906-84	1/2”-13NC Lock Nut
3.	900-4906-70	1/2”-13NC x 1” Hex Head Bolt
4. a.	208-3000-79	Nose Bar Linkage
b.	208-1000-14	Nose Bar Linkage Assembly (Includes 2 - 5)
5.	900-4909-27	1/2”-13NC x 2 1/4” Hex Head Bolt
6.	208-2000-18	Nose Bar Mount
7.	900-1924-80	Polymer Bushing - 1” OD x 3/4” ID x 1”
8.	900-9917-31	Nose Bar Sleeve

NOTICE Parts may not be exactly as shown.

NOTICE **Nuts, bolts, washers, and all other components can be ordered by physical description.**

SERVICE RECORD

DATE	DESCRIPTION	AMOUNT

SERVICE RECORD

DATE	DESCRIPTION	AMOUNT

PTO Clutch/Brake

Installation and Maintenance

2006

Ogura Industrial Corporation

Ogura Design

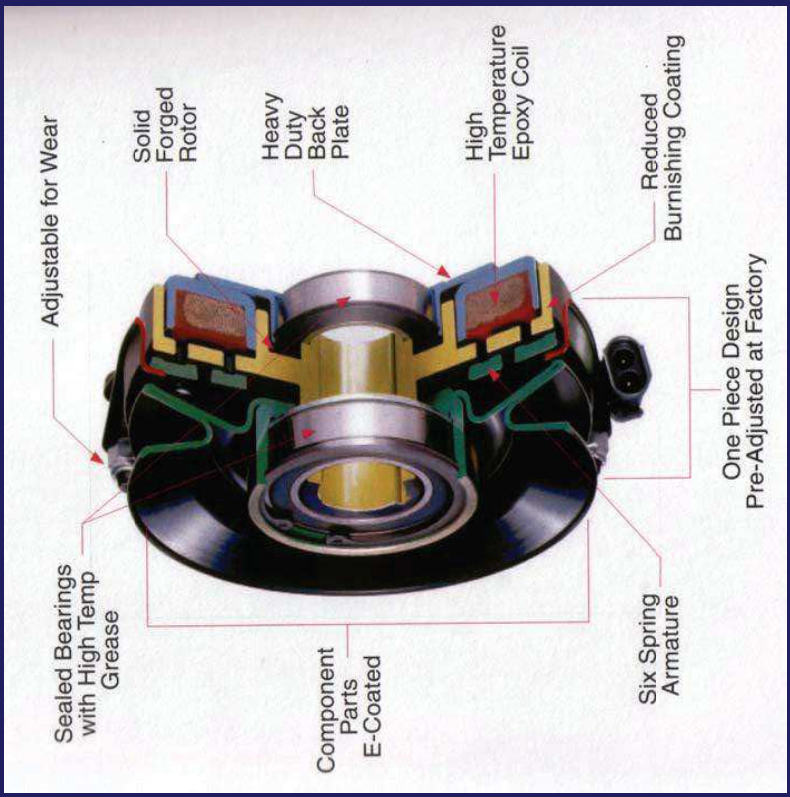

2006 Ogura Industrial Corporation

Outline

- Pre-Installation
- Installation
- Maintenance

Pre-Installation

Ogura Industrial Corporation

2006

Pre-Installation Check

- Engine Shaft
- Key Length and Height
- Direction of Rotation
- Backing Plate Restraint

Pre-Installation Check

Engine Shaft

- PTO clutches are almost always mounted on engine shaft

Pre-Installation Check

Engine Shaft

- Shaft should be long enough to support clutch
  - Minimum shaft length = bore diameter

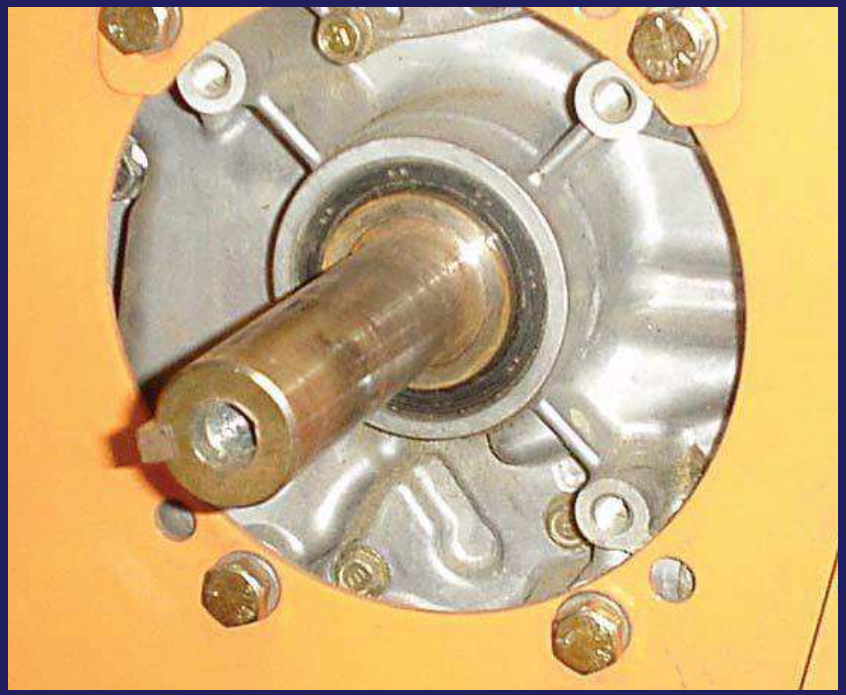

Pre-Installation Check

Engine Shaft

- For two-piece design, both halves need shaft support

Pre-Installation Check

Engine Shaft

- Engine shaft needs step

2006 Ogura Industrial Corporation

Pre-Installation Check
Engine Shaft

- Engine shaft needs to be tapped

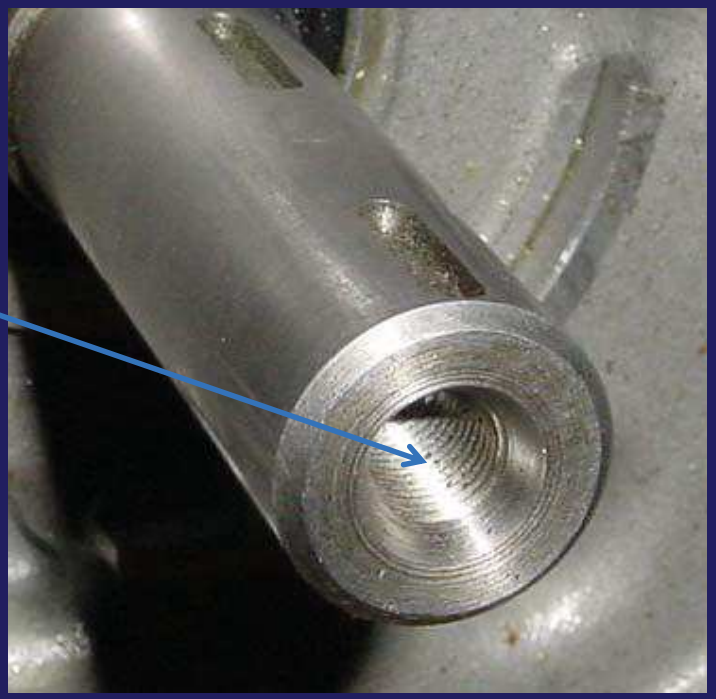

Pre-Installation Check

Key Length and Height

- For clutch without through- keyway (keyway in rotor only), key should be short enough that it will not hit pulley bearing carrier

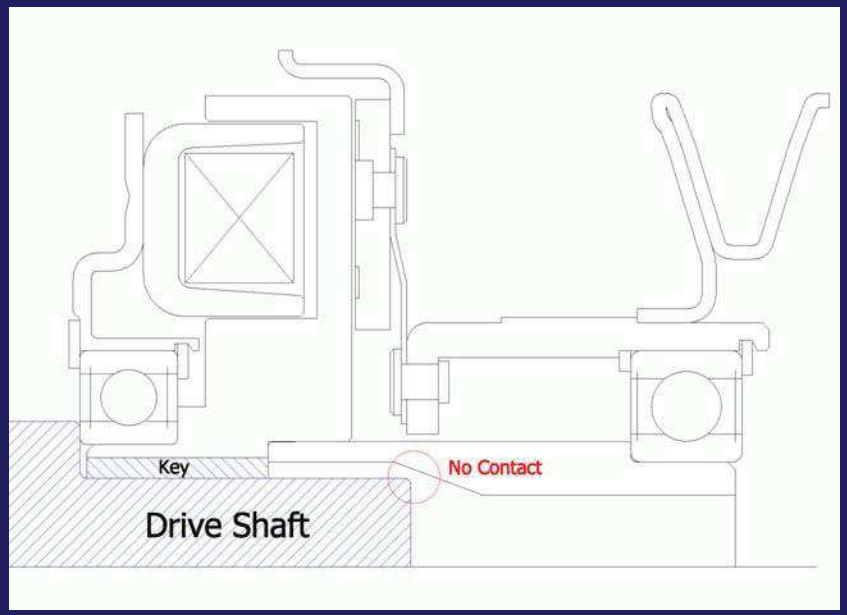

Pre-Installation Check

Key Length and Height

- For clutch with open keyway on field-side bearing race, key may need reduced height

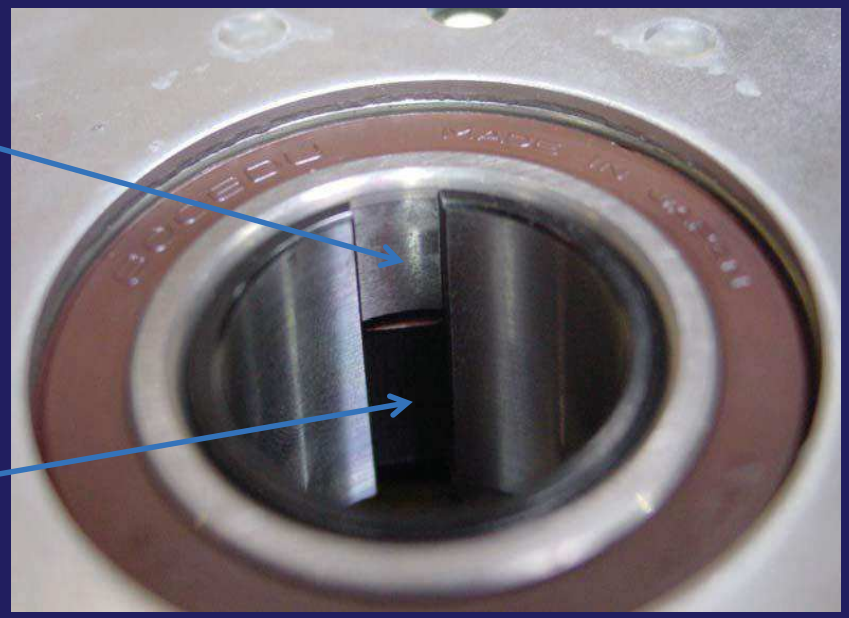

Pre-Installation Check

Direction of Rotation

- Clutches can mount with pulley facing toward or away from engine

Pre-Installation Check

Direction of Rotation

- Leaf springs are set at factory to run either clockwise or counter-clockwise

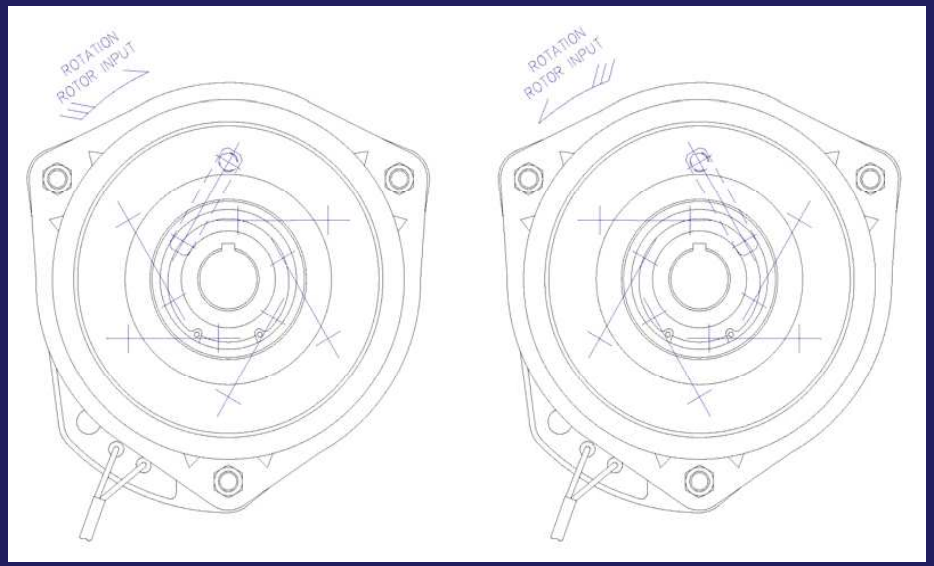

Pre-Installation Check

Direction of Rotation

- Check direction of rotation to verify that spring direction is correct
- Springs should operate in tension and not compression
  (most engines rotate counterclockwise)

Pre-Installation Check

Backing Plate Restraint

- PTO backing plate only needs to withstand brake force
  - This can be 2 ~ 10 ft-lbs depending on clutch size

Pre-Installation Check

Backing Plate Restraint

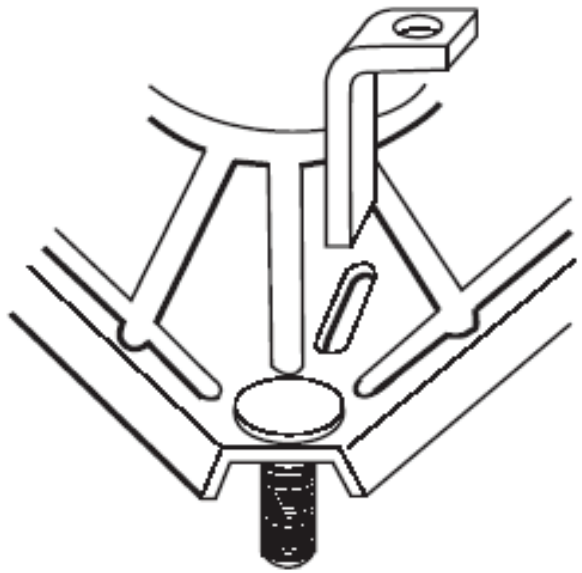

(Figure 11)
1/4" x 5/8" Bent Flat
Steel Field Restraint

- Tab Type

Pre-Installation Check

Backing Plate Restraint

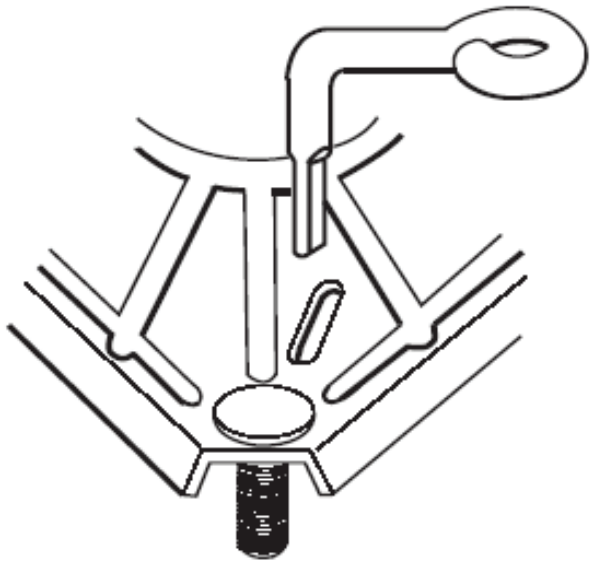

(Figure 12)
5/16" Diameter Bent Steel
Rod Field Restraint

- Rod Type

Pre-Installation Check

Backing Plate Restraint

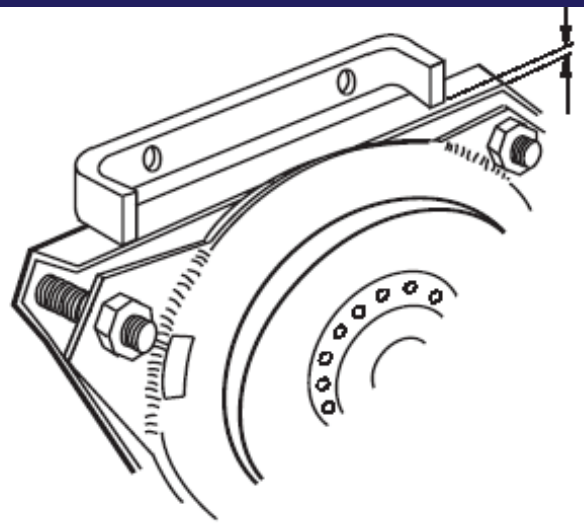

(Figure 14)
1/8" x 3/4" Bent Flat Steel Restraint

- Flat Type

Pre-Installation Check

Backing Plate Restraint

- Rubber Bushing Type

Installation

Ogura Industrial Corporation

2006

PTO Clutch Installation

① Verify appropriate shaft/pulley for clutch

② Set key in shaft keyway if required (some clutches have internal key)

③ Slide clutch onto shaft

④ Verify good contact with face of bearing inner ring

⑤ Tighten center bolt and washer

⑥ Verify backing plate has slight axial and radial freedom

⑦ Connect power

⑧ Burnish clutch

PTO Clutch Installation #1

Installing Pulley

- Most installations require drive pulley to be installed before clutch
- Pulley must not contact radius of shaft shoulder
  - Pulley must sit against shoulder face, otherwise center bolt could become loose

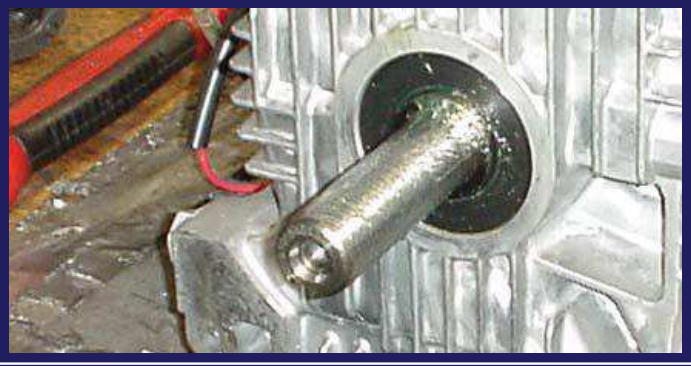

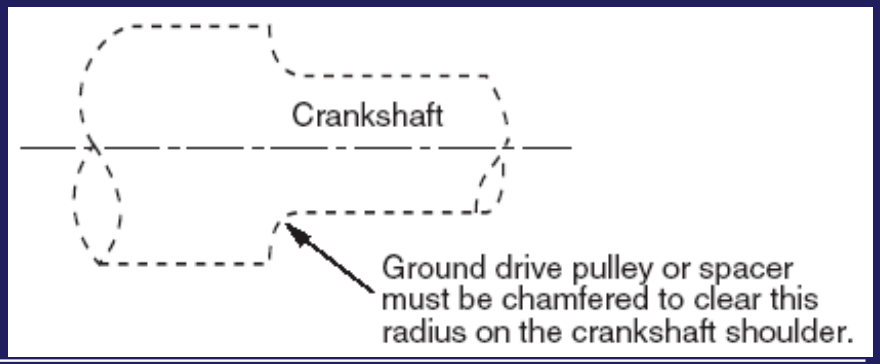

PTO Clutch Installation #2

Installing Key

- If clutch requires key, first set key in key way on shaft, then mount clutch (some clutches have internal key)
- Do not force clutch onto shaft or it will damage bearing races

PTO Clutch Installation #4

Mounting Clutch

- Clutch should be mounted such that bearing race makes contact with:
  - Shaft step
  - Drive pulley
  - Washer
- All faces must be normal to shaft within 0.003”

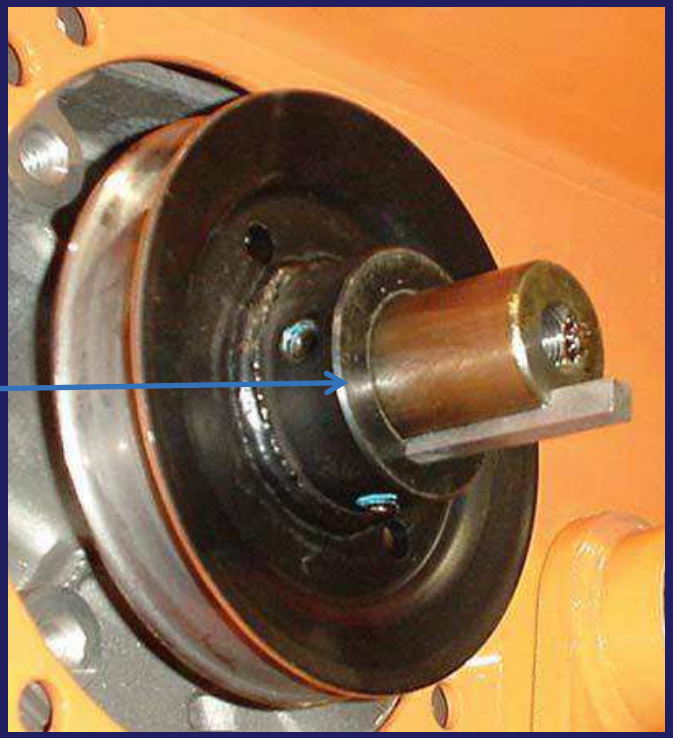

2006

Ogura Industrial Corporation

PTO Clutch Installation #5

Installing Center Bolt

- Install center bolt and washer on end of tapped shaft
- Washer should be about 0.250” thick with OD ≥ ID of bearing inner ring

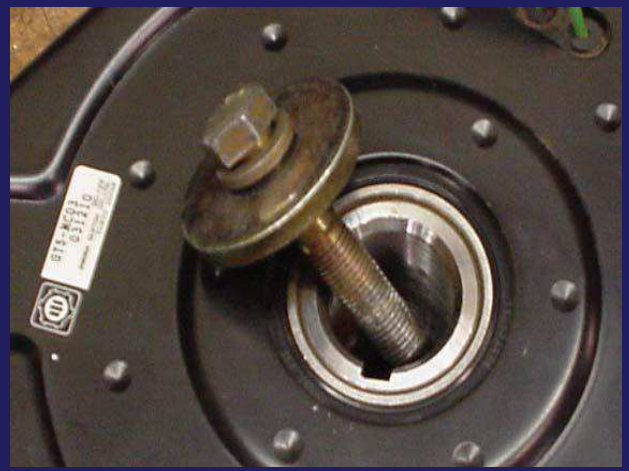

2006 Ogura Industrial Corporation

PTO Clutch Installation #5

Installing Center Bolt

- Center bolt tightening torque is based on bolt grade
  - Torque should be about 30 ~ 55 ft-lbs
- In diesel or heavy vibration application, adhesive should be used to lock bolt in place

PTO Clutch Installation #6

Installing Restraint

- Install backing plate restraint
  - If pin or slot type is used, restraint may already be on machine frame or engine face
- After mounting, verify slight axial and radial movement is present ($^1/_{16}$" ~ $^1/_8$")
  (very important to avoid field bearing failure)

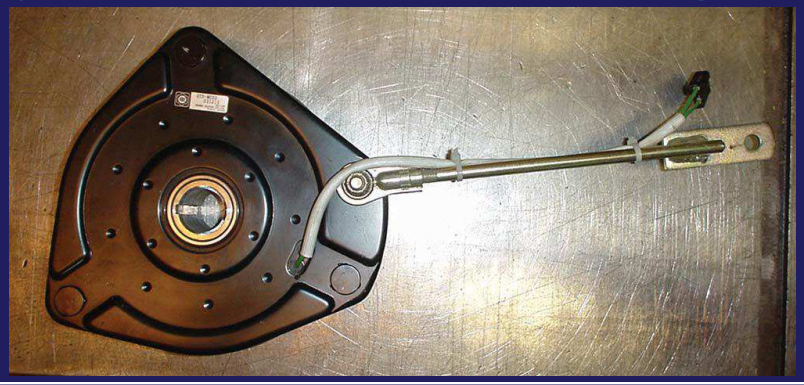

PTO Clutch Installation #7

Connecting Power

- Attach terminal housing on clutch lead wire to corresponding power terminal
- Turn on electrical power on mower without starting engine if possible
- Turn on PTO switch to verify clutch pulls in
  - Clutch will make “click” sound at engagement

PTO Clutch Installation #8

Burnishing

- What is it?
  - Wearing/mating of armature and rotor surfaces
- Why is it important?
  - To achieve greater initial torque
- How is it done?
  - Cycle clutch 20 ~ 50 times lightly loaded at under 2,000 rpm

Burnishing Recommendations

Deck Size	Cycles	On/Off
32” ~ 42”	25 ~ 50	10 / 5 sec
48” ~ 52”	25 ~ 50	10 / 10 sec
61”	25 ~ 50	10 / 15 sec
72”	25 ~ 50	10 / 20 sec

Maintenance

Ogura Industrial Corporation

2006

Maintenance

- Most clutch parts do not require maintenance and can not be replaced
  - Bearings are sealed for life of clutch
  - Armature, rotor, and brake wear evenly and can not be replaced individually
  - Coil can not be removed

Adjustment for Wear

- All Ogura one-piece clutches are adjusted at factory (no initial adjustment required)
- As adjustable clutches wear, they can be re-gapped to extend overall life

Adjustment for Wear

- If clutch fails to pull in or will not continue to pull in when hot, air gap may need adjustment
- To make adjustments, taking PTO off mower may be easier
- Necessary equipment
  - 0.015”~0.022” feeler gauge
  - $^{9}/_{16}$” open-end box wrench

Adjustment for Wear

- Identify clutch model from label located on back of field
- There are three inspection slots on brake shroud
- Place feeler gauge in slot between armature and rotor
- Slowly tighten brake nut until armature and rotor contact feeler gauge

Adjustment for Wear

- Almost all Ogura clutches use 24UNF brake bolt, thus one turn of brake nut equates to approximately 0.04” of axial movement
  (for reference only: feeler gauge is still required)

Adjustment for Wear

Ogura Industrial Corporation

2006

Adjustment for Wear

Model Type	Air Gap Range
GT1, GT1A	0.012” ~ 0.024”
GT2, GT2.5	0.015” ~ 0.024”
GT3.5, GT4, GT5	0.016” ~ 0.024”

Adjustment for Wear

- Setting gap towards low range will increase cycle life between adjustments
- Caution: do not set gap below minimum or clutch may be damaged
- Once gap is set, rotate armature and rotor, check gap with feeler gauge, and make adjustments as required

Adjustment for Wear

- Apply full voltage to clutch
- Rotate armature and rotor to verify no contact between armature and brake shroud
- If there is contact, back off brake nuts and retry until there is no contact

Thank You

EVERYTHING ABOUT AN OGURA CLUTCH WORKS

For more information on Ogura clutches, visit us on the web at

www.ogura-clutch.com

2006

Ogura Industrial Corporation