REPLACEMENT PARTS SECTION

Depending on what replacement parts you are ordering the following information will be needed:

GRINDER COMPONENTS
Serial Number
Model Number of Grinder

ENGINE COMPONENTS
Brand
Engine Serial Number
Engine Spec. Number

NOTICE

When ordering any replacement parts you should have the serial number (S/N) and model of the machine to ensure that you receive the correct replacement part. See page 6 for typical serial number & work order number locations.

NOTICE

All nuts, bolts, washers, and many other components can be ordered by physical description.

NOTICE

Some of the components shown in this section are for optional equipment and may not apply to every machine.

NOTICE

Bandit Industries Inc. reserves the right to make changes in models, size, design, installations and applications on any part without notification.

MACHINE ORIENTATION REFERENCE

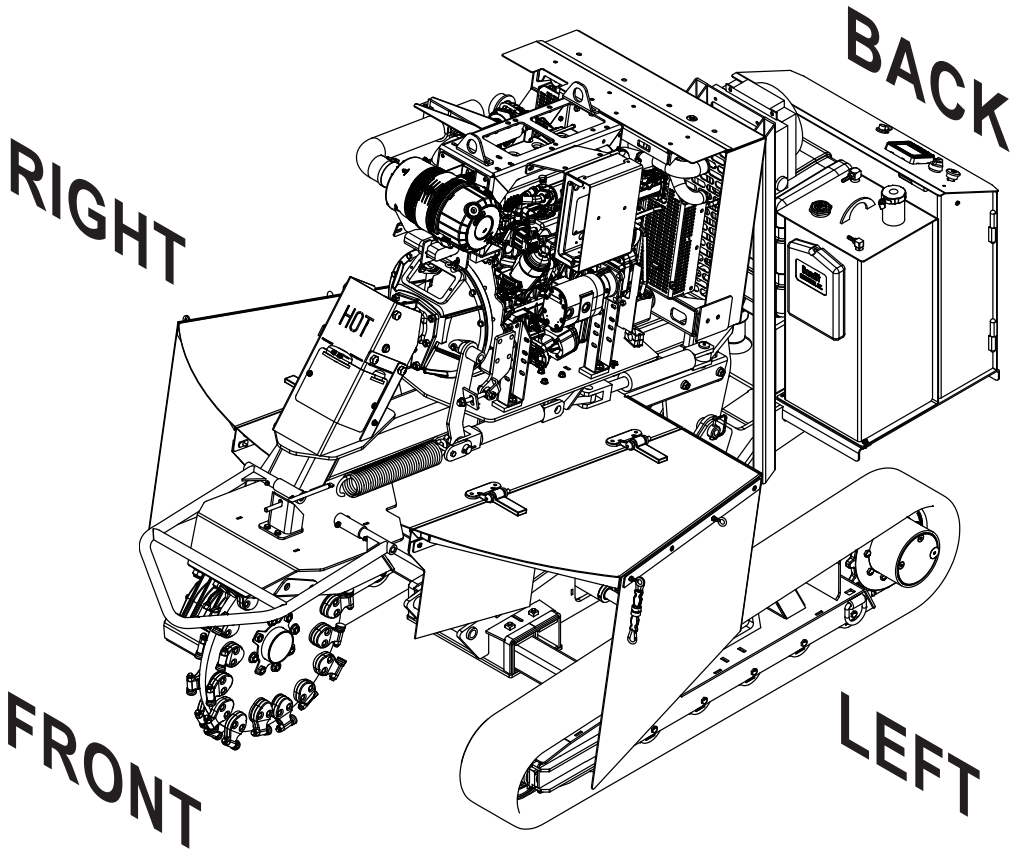

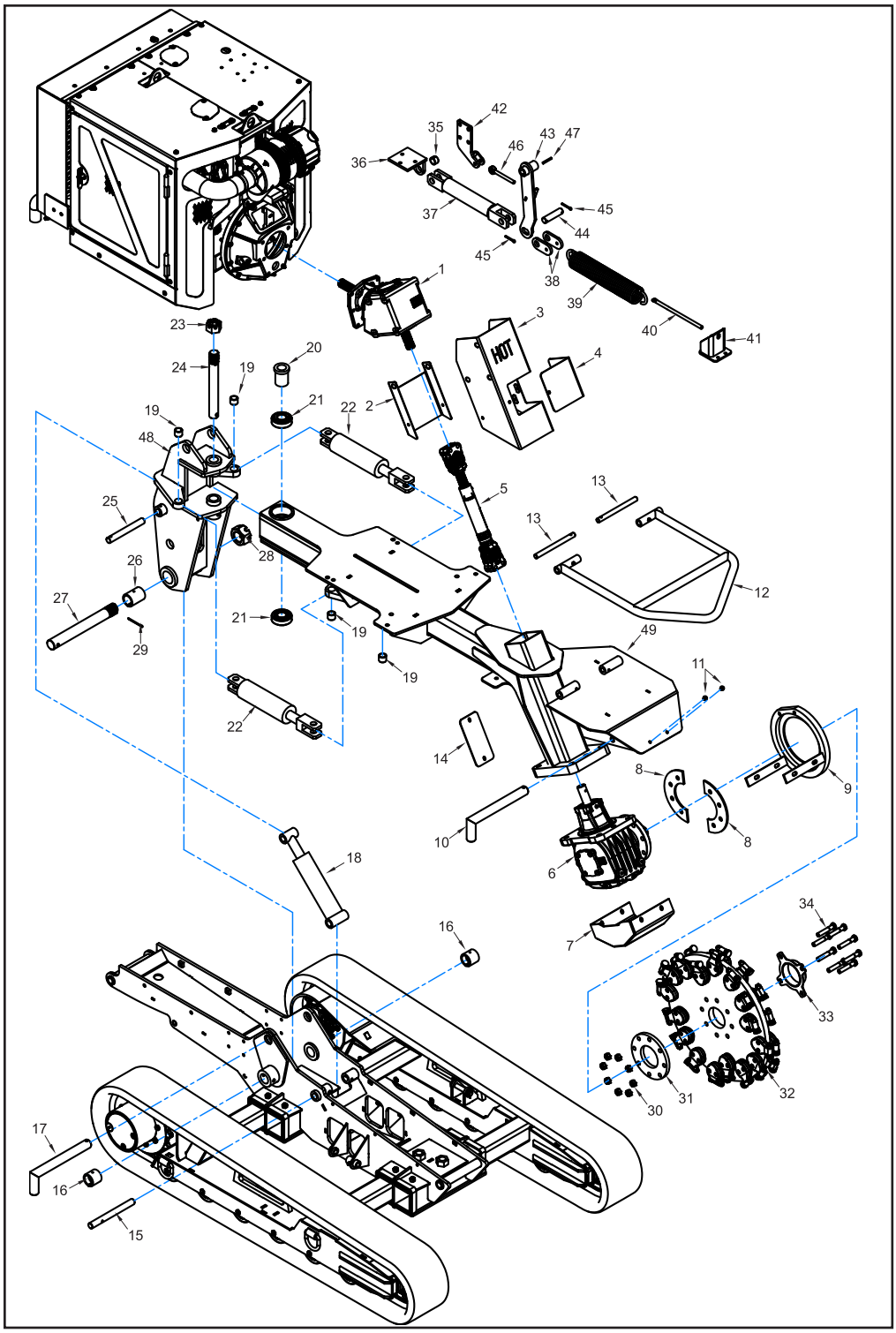

NOTICE Parts may not be exactly as shown.

#	Part Number	Description
1	900-3989-99	Gear Box - Engine
2	203-3001-29	Drive Shaft Cover - Back
3	209-2000-14	Drive Shaft Cover - Front
4	209-3001-88	Drive Shaft Access Cover
5	900-1926-21	Drive Shaft
6	900-3990-00	Gear Box - Cutter Wheel
7	209-2000-22	Gear Box Guard
8	209-3001-06	Wheel Retainer Hub Plate
9	209-2000-34	Wheel Catch (Start 9/19)
	209-2000-21	Wheel Catch (Pre 9/19)
10	209-3001-83	Cutter Wheel Lock Pin
11	900-7901-11	Rubber Bumper
12	209-2000-08	Cutter Wheel Bar
13	209-3000-54	Cutter Wheel Bar Pin
14	209-3001-57	Drive Shaft Access Cover - Bottom
15	209-3000-27	Up / Down Cylinder Pin - Frame
16	900-1926-61	Lower Pivot Pin Bushing - 2 1/4" OD x 1 3/4" ID x 2"
17	209-2000-25	Frame Lock Pin (Pre 9/19)
18	900-3992-77	Up / Down Cylinder
19	900-1902-42	Swing Cylinder Bushing
20	209-3001-24	Pivot Pin Sleeve
21	900-1926-83	Pivot Bearing
22	900-3958-80	Swing Cylinder
	900-3934-20	Swing Cylinder Pin
23	900-4907-23	1 1/2"-6NC Castle Nut
24	209-3000-77	Cutter Wheel Frame Pivot Pin
25	209-3001-14	Up / Down Cylinder Pin - Pivot Assembly
26	900-1926-60	Lower Pivot Pin Bushing - 2 1/4" OD x 1 3/4" ID x 3"

#	Part Number	Description
27	209-3002-28	Lower Pivot Pin (Start 9/19)
	209-3001-16	Lower Pivot Pin (Pre 9/19)
28	900-4925-68	1 3/4"-5NC Castle Nut
29	900-4921-67	3" Cotter Pin
30	900-4903-39	5/8"-11NC Lock Nut
31	209-3001-31	Cutter Wheel Spacer
32	See Pages 48 - 49	Cutter Wheel Assembly
33	209-2000-17	Cutter Wheel Dust Cover
34	900-4906-98	5/8"-11NC x 3 1/2" Bolt
	900-4901-32	5/8" Mill Carb Washer
35	900-1919-35	Clutch Engagement Cylinder Bushing - 1 1/4" OD x 1" ID x 3/4"
36	209-2000-44	Cylinder Base
37	900-3958-80	Clutch Engagement Cylinder
38	209-3003-50	Single Spring Cylinder End
39	900-4926-93	Extension Spring
40	900-4902-02	1/2"-13NC x 10 1/2" Spade Bolt
41	209-2000-46	Front Mount for Clutch Engagement
42	209-2000-45	Clutch Arm Stopper
43	209-2000-43	Clutch Engagement Arm
44	900-3934-20	Cylinder Pin for Clutch Engagement
45	900-4911-75	2" Cotter Pin
46	900-4902-73	Clutch Engagement Adjuster Bolt
47	001-3007-25	Key for Clutch Engagement
48	209-1000-05	Pivot Assembly
	209-2000-10	Pivot Weldment
49	209-1000-06	Upper Frame Assembly
	209-2000-11	Upper Frame Weldment

NOTICE Nuts, bolts, washers, and all other components can be ordered by physical description.

GREEN TEETH CUTTER WHEEL

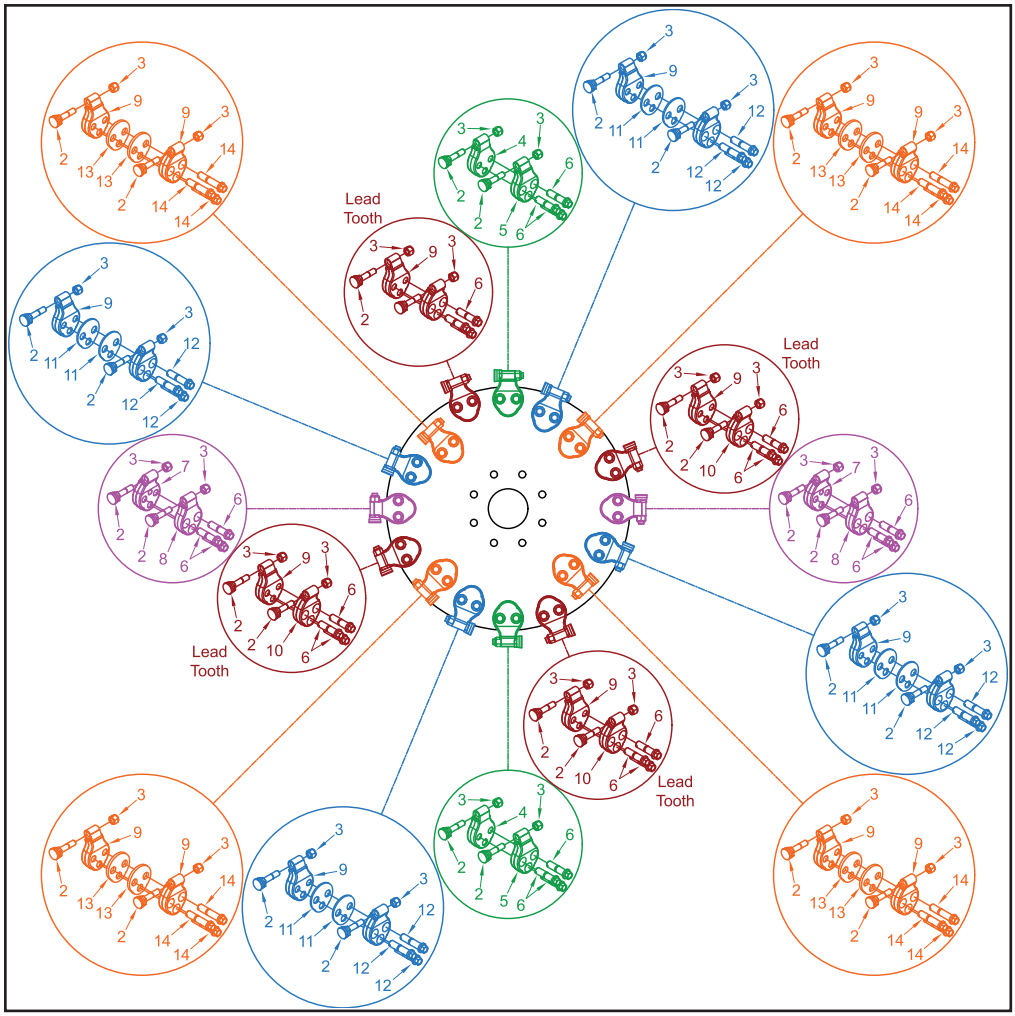

#	Part Number	Description
1	209-1000-16	Green Teeth Cutter Wheel Assembly (Includes 15)
	209-3000-78	Bandit Cutter Wheel Only
2	900-9918-24	WearSharp Tooth
3	900-9918-50	WearSharp Tooth Nut
4	900-9907-36	Threaded Straight Pocket (3-Bolt)
	900-9907-11	Threaded Straight Pocket (2-Bolt)
5	900-9907-37	Counter Bored Reverse Pocket (3-Bolt)
	900-9907-48	Counter Bored Reverse Pocket (2-Bolt)
6	900-9915-96	Pocket Bolt - No Spacer
7	900-9907-38	Threaded Reverse Pocket (3-Bolt)
	900-9907-49	Threaded Reverse Pocket (2-Bolt)
8	900-9907-35	Counter Bored Straight Pocket (3-Bolt)
	900-9907-47	Counter Bored Straight Pocket (2-Bolt)

#	Part Number	Description
9	900-9907-34	Threaded Angle Pocket (3-Bolt)
	900-9907-10	Threaded Angle Pocket (2-Bolt)
10	900-9907-33	Counter Bored Angle Pocket (3-Bolt)
	900-9907-09	Counter Bored Angle Pocket (2-Bolt)
11	900-9943-79	1/8” Spacer (3-Bolt)
	209-3001-28	1/8” Spacer (2-Bolt)
12	900-9910-68	Pocket Bolt - 1/8” Spacer
13	900-9943-80	1/4” Spacer (3-Bolt)
	209-3001-27	1/4” Spacer (2-Bolt)
14	900-9915-97	Pocket Bolt - 1/4” Spacer
15	900-9950-11	3-Bolt Cutter Wheel Tooth Kit (Includes 2 - 14)
	900-9942-91	2-Bolt Cutter Wheel Tooth Kit (Includes 2 - 14)

Torque pocket bolts to 125 - 150 ft.-lbs. (169 - 203 Nm).
Torque tooth nut to 45 - 62 ft.-lbs. (42 - 58 Nm).

NOTICE Parts may not be exactly as shown.

NEW RIVER “REVOLUTION” CUTTER WHEEL

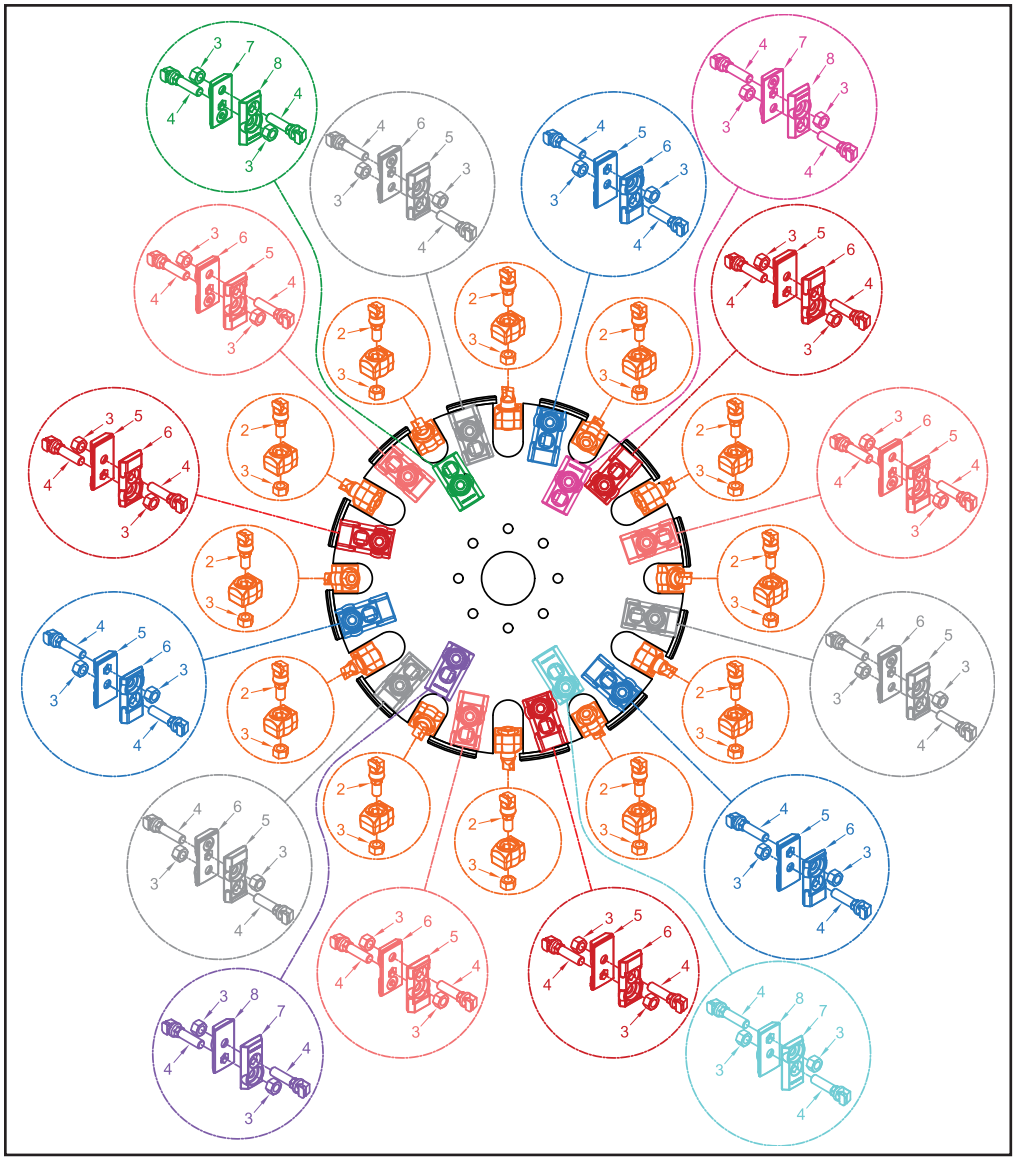

#	Part Number	Description
1	900-9947-51	New River “Revolution” Cutter Wheel
2	900-9912-24	Lead Tooth
3	900-9909-99	Tooth Nut
4	900-9912-23	Side Tooth

#	Part Number	Description
5	900-9933-93	HD Pocket with Locator Pin
6	900-9933-94	HD Pocket without Locator Pin
7	900-9912-25	Pocket with Locator Pin
8	900-9912-26	Pocket without Locator Pin

Torque Lead Teeth to 200 ft.-lbs. (271 Nm)
Torque Side Teeth to 125 ft.-lbs. (169 Nm).

NOTICE Parts may not be exactly as shown.

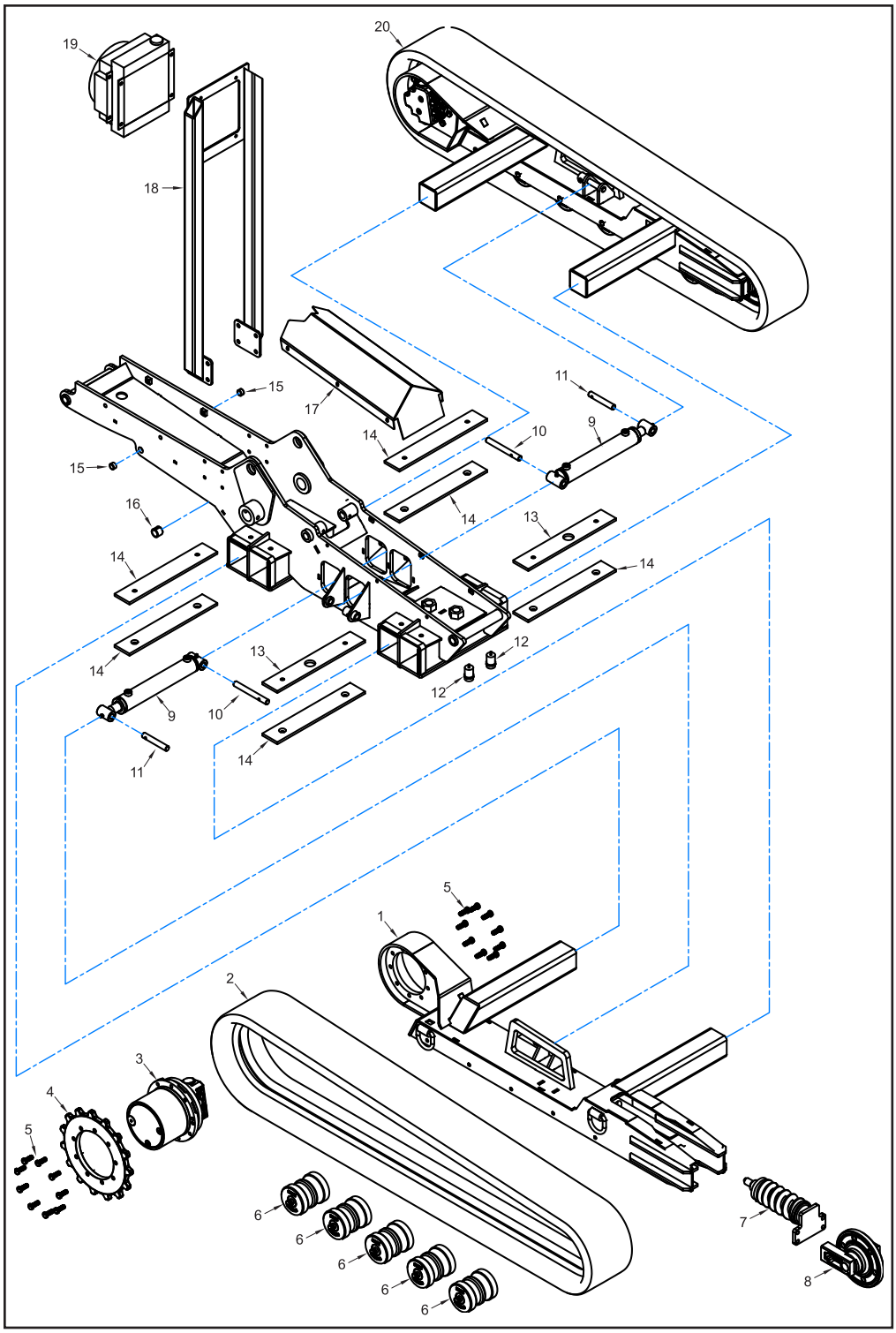

NOTICE Parts may not be exactly as shown.

#	Part Number	Description
1	209-1000-02	Right Track Assembly (Includes 2 - 8, 11)
	209-2000-04	Right Track Assembly
2	900-5916-50	Rubber Track
3	900-5916-49	Track Motor
4	900-5916-48	Track Motor Sprocket
5	900-4922-16	Bolt for Track Motor - M12 x 1.75 x 35 MM
6	900-5916-46	Track Rollers
7	900-5917-54	Tensioner Assembly
8	900-5917-42	Front Idler Assembly
9	900-3992-78	Track Carrier Extension Cylinder
10	209-3000-26	Track Carrier Extension Cylinder Pin
11	204-3001-60	Track Carrier Extension Cylinder Pin - Rod End

#	Part Number	Description
12	900-2934-16	Track Carrier Proximity Sensor
13	209-3002-03	Track Slide Sleeve Lining - With Sensor Mount
14	209-3002-02	Track Slide Sleeve Lining
15	900-1927-63	Grading Blade Bushing - 3/4” ID x 7/8” OD x 1/2”
16	900-1902-42	Grading Blade Cylinder Bushing - 1” ID x 1 1/4” OD x 1”
17	209-2000-19	Track Base Cover
18	209-2000-33	Hydraulic Oil Cooler Mount
19	900-3953-06	Hydraulic Oil Cooler
20	209-1000-01	Left Track Assembly (Includes 2 - 8, 11)
	209-2000-03	Left Track Weldment

NOTICE **Nuts, bolts, washers, and all other components can be ordered by physical description.**

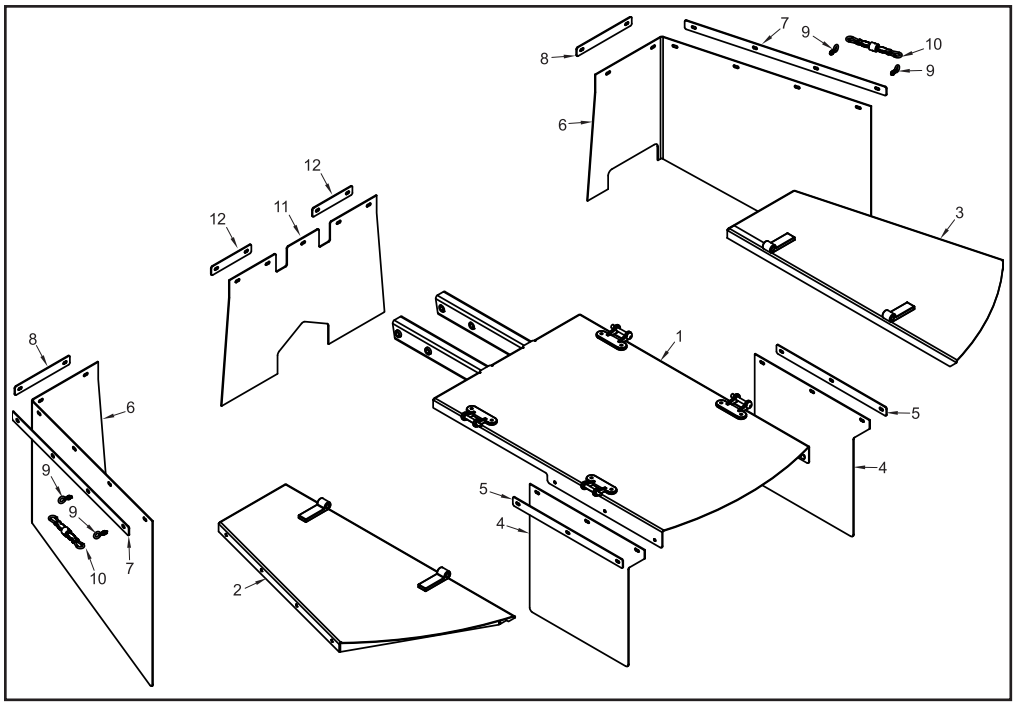

#	Part Number	Description
1	209-2000-09	Middle Chip Pan Weldment
2	209-2000-13	Right Chip Pan Weldment
3	209-2000-12	Left Chip Pan Weldment
4	209-3001-85	Chip Curtain - Middle Front
5	209-3002-12	Chip Pan Strap - Middle Front
6	209-3001-01	Chip Curtain - Left & Right Side
7	209-3002-09	Chip Pan Strap - Left & Right Side

#	Part Number	Description
8	209-3002-10	Chip Pan Strap - Left & Right Side Back
9	900-4926-99	Eye Bolt
10	900-4927-00	Chip Pan Bungee
11	209-3001-02	Chip Curtain - Middle Back
12	209-3002-11	Chip Pan Strap - Middle Back

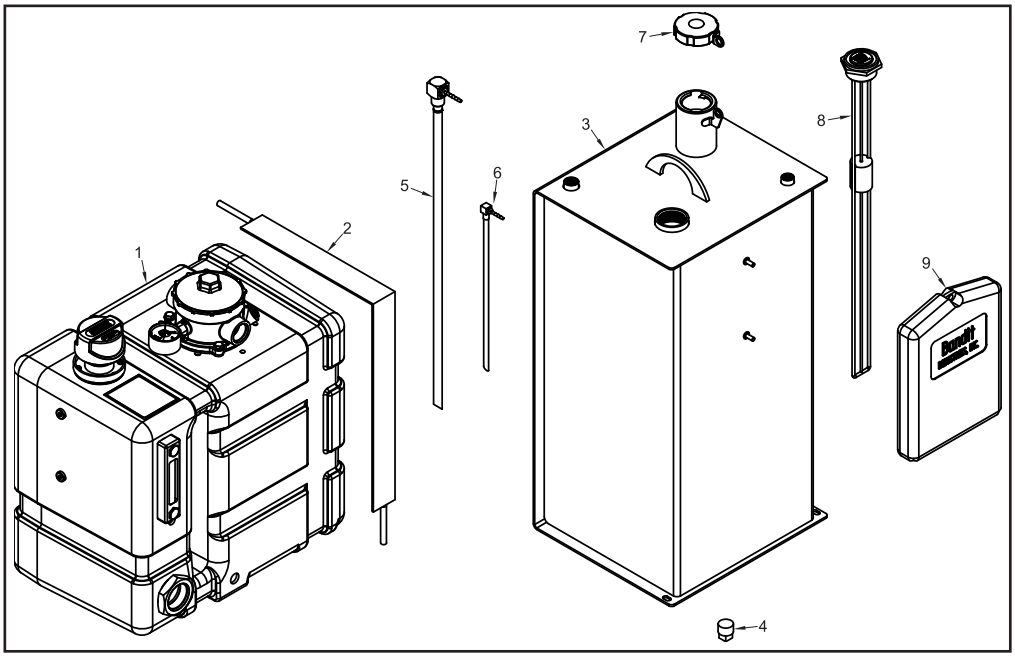

#	Part Number	Description
1	900-3990-31	Hydraulic Tank Assembly
	3990-31-01	Sight Gauge
	3990-31-02	Suction Strainer
	3990-31-03	Drain Plug
	3990-31-04	In Tank Filter
	3990-31-05	Fill Cap
	3990-31-06	Filter Element
2	900-3990-32	Hydraulic Tank Strap
3	209-1000-08	Fuel Tank Assembly (Includes 4 - 8)
	209-2000-01	Fuel Tank Weldment

#	Part Number	Description
4	900-3922-60	Magnetic Drain Plug
5	900-3926-84	Drop Pipe - 1/2” NPT x 3/8” NPT
	900-3931-53	Barbed Fitting - 3/8” NPT to 5/16” NPT
6	900-3909-00	Drop Tube - 3/8” NPT x 1/4” NPT
	900-3909-02	Barbed Fitting - 1/4” to 1/4”
7	900-3988-07	Fuel Cap
8	900-2903-95	Rochester Sight Gauge - 24”
9	900-9910-28	Manual Holder

NOTICE Parts may not be exactly as shown.

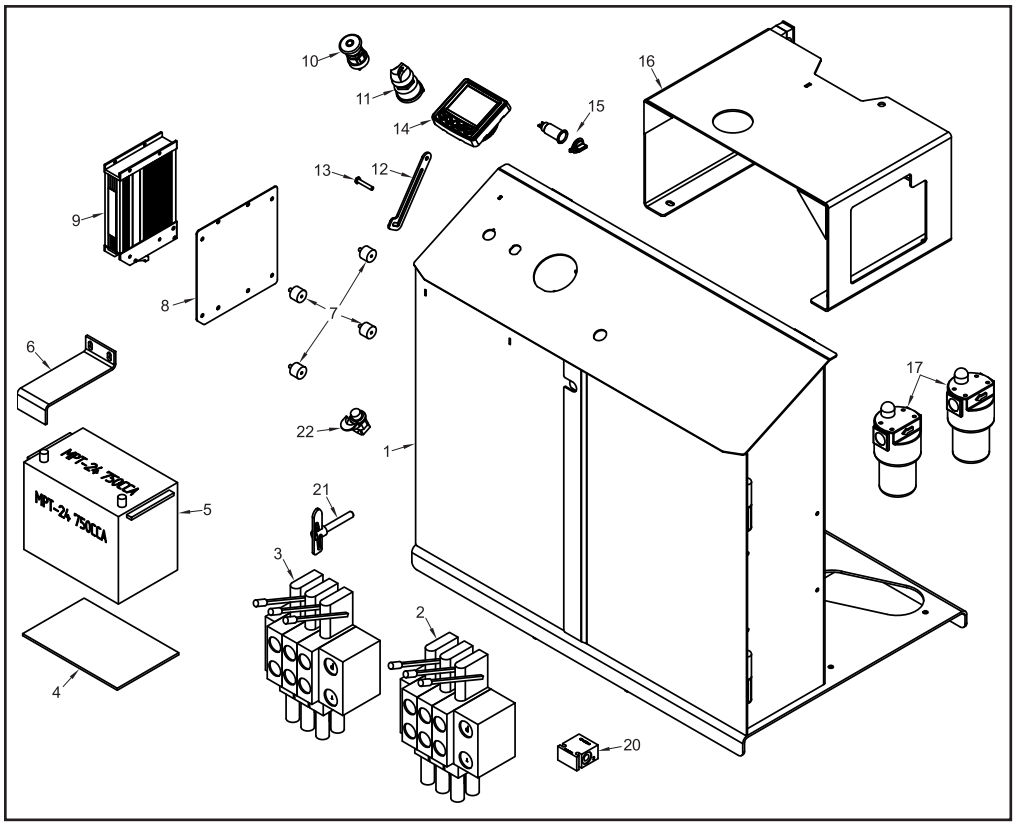

#	Part Number	Description
1	209-1000-00	Control Box, Fuel Tank, & Hydraulic Tank Assembly (Includes 2 - 16)
	209-2000-00	Control Box Weldment
2	900-3996-55	Right Track 3-Bank Valve (Start 9/19)
	900-3989-48	Right Track 3-Bank Valve (Pre 9/19)
3	900-3995-62	Left Track 3-Bank Valve (Start 9/19)
	900-3989-49	Left Track 3-Bank Valve (Pre 9/19)
4	204-3002-68	Battery Pad
5	900-6969-11	Battery
6	992-3001-27	Battery Strap
7	900-7901-42	Rubber Isolator
8	992-1000-97	Remote Control Receiver Mount

#	Part Number	Description
9	300-8008-83	Remote Control Receiver
10	900-2931-47	Emergency Stop
11	900-2927-91	Ignition Switch
12	209-3002-07	Control Box Latch
13	900-4926-75	Drop Latch Bolt Keeper
14	300-8008-84	PV380 Display
15	900-2914-53	12v Power Port
	900-2914-54	Power Port Cap
16	209-2000-20	Hydraulic Tank Mount
17	900-3991-58	In-Line Filter
18	900-3994-64	Sequence Valve (Not Shown)
19	900-3994-12	Reducing Valve (Not Shown) (Pre 9/19)
20	900-3935-35	2-Speed Block (Pre 9/19)
21	900-4921-44	Drop Lock Latch
22	900-9944-04	Lock Latch

NOTICE Parts may not be exactly as shown.

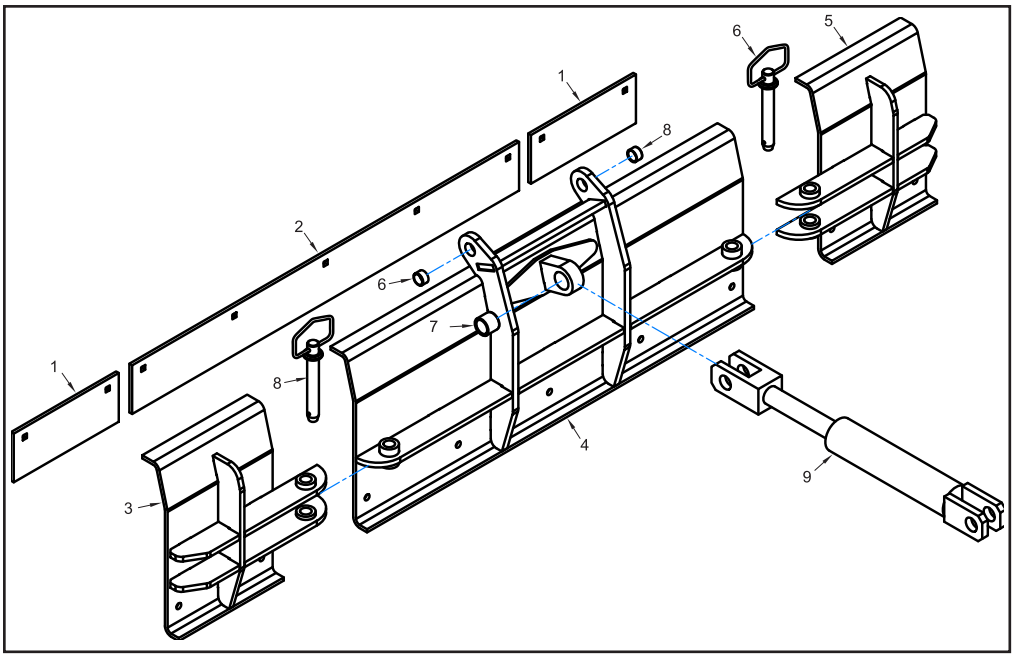

#	Part Number	Description
1	209-3003-68	Wing Wear Bar
2	991-3001-40	Blade Wear Bar
3	209-2000-56	Right Wing Grading Blade
4	209-2000-55	Center Grading Blade
5	209-2000-57	Left Wing Grading Blade

#	Part Number	Description
6	900-4916-87	Grading Blade Pin
7	900-1902-42	Cylinder Bushing
8	900-1927-63	Grading Blade Bushing - 3/4” ID x 7/8” OD x 1/2”
9	900-3958-80	Grading Blade Cylinder

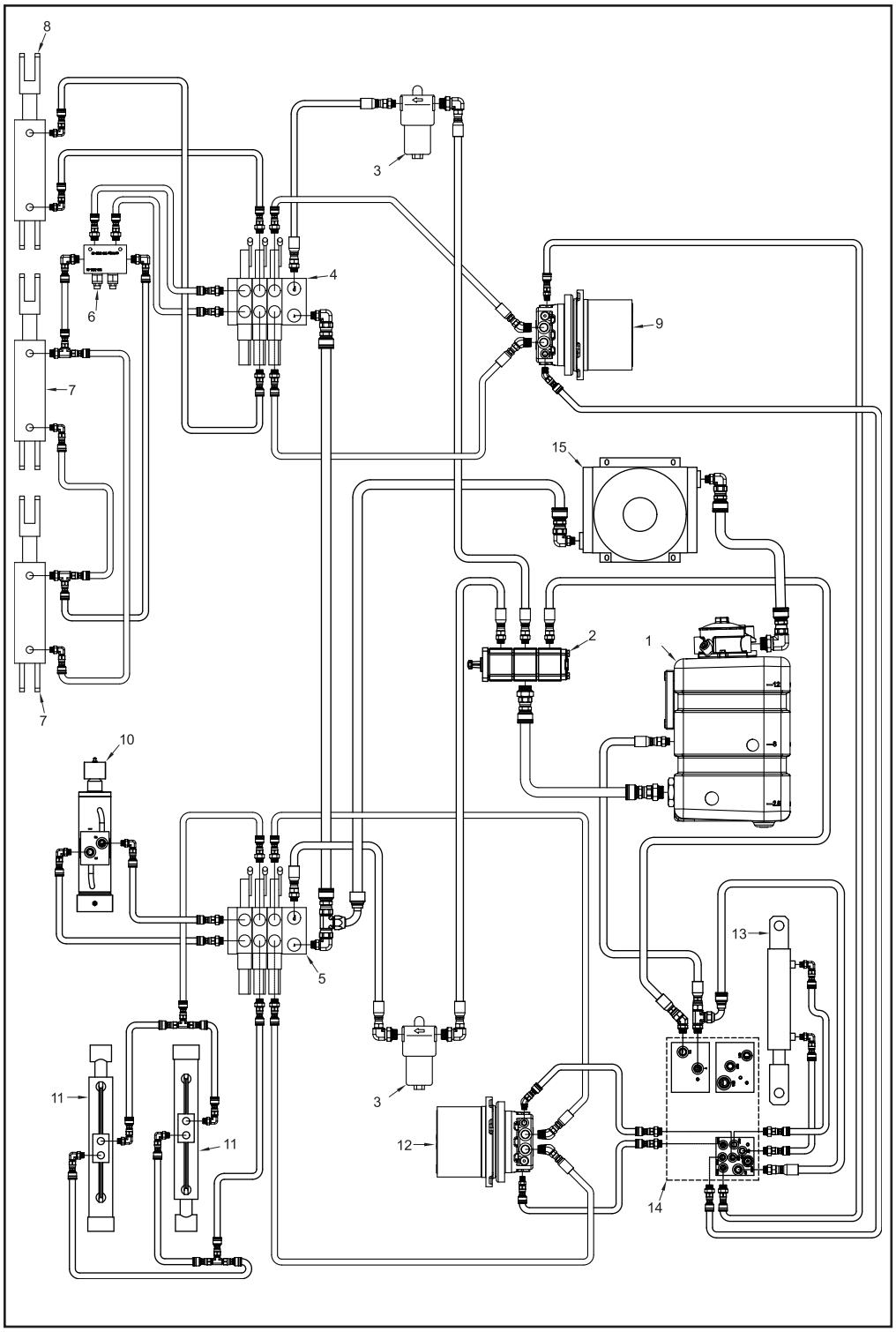
8
3
4
6
9
7
15
2
1
7
10
5
13
3
11
11
12
14

#	Part Number	Description
1	See Page 53	Hydraulic Tank
2	900-3997-51	Hydraulic Pump
3	900-3991-58	High Pressure Filter
4	900-3996-55	Right Valve Bank
5	900-3995-62	Left Valve Bank
6	900-3956-84	Dual Counter Balance Valve
7	900-3958-80	Swing Cylinder
8	900-3958-80	Optional Blade Cylinder
9	900-5916-49	Right Track Motor

#	Part Number	Description
10	900-3992-77	Up / Down Cylinder
11	900-3989-87	Track Extension Cylinder
12	900-5916-49	Left Track Motor
13	900-3927-32	Clutch Engagement Cylinder
14	900-3995-80	Clutch Actuation Manifold
15	900-3953-06	Oil Cooler
	900-3965-78	Oil Cooler - Fan Only
	900-3966-18	Oil Cooler - Thermostat

SERVICE RECORD

DATE	DESCRIPTION	AMOUNT